TIE-DOWN CONTROL CABINET p5: LOAD CELLS

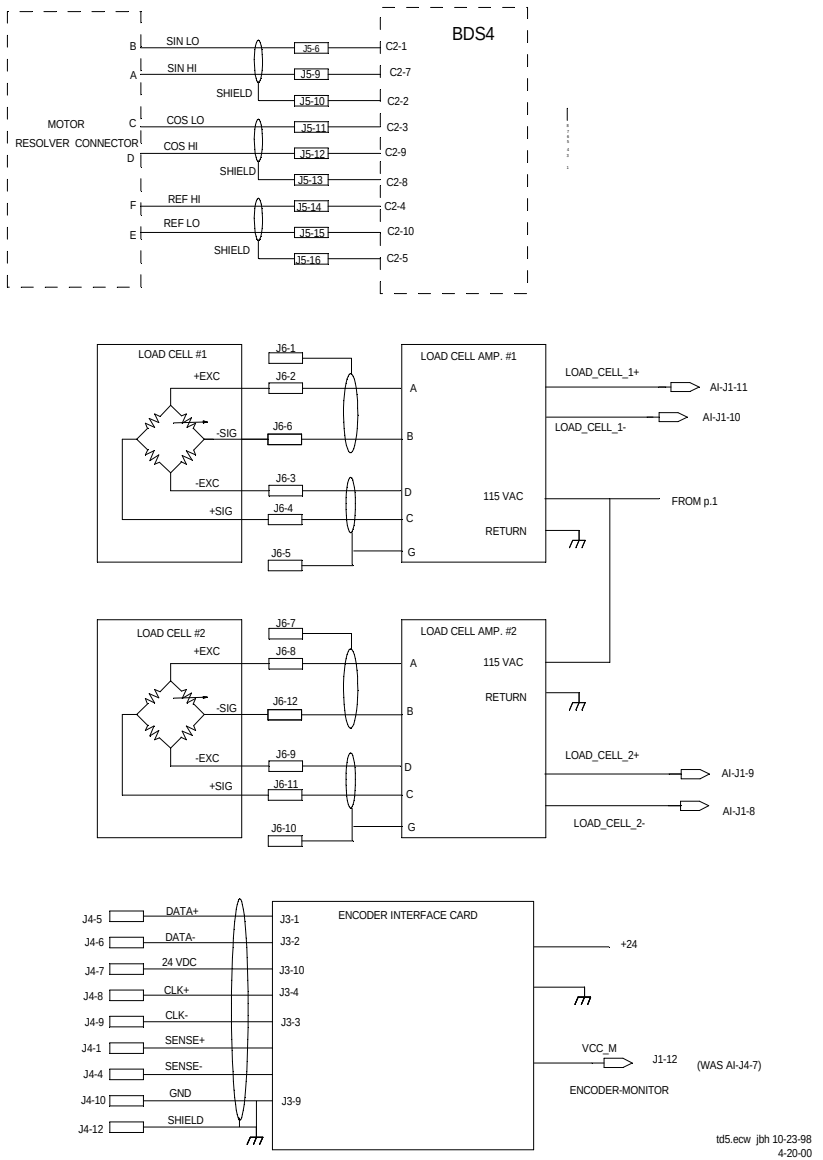

td5.ecw jbh 10-23-98
4-20-00

TIE-DOWN CONTROL CABINET p5a: LOAD METERING AND AUTORELEASE SPEED POT

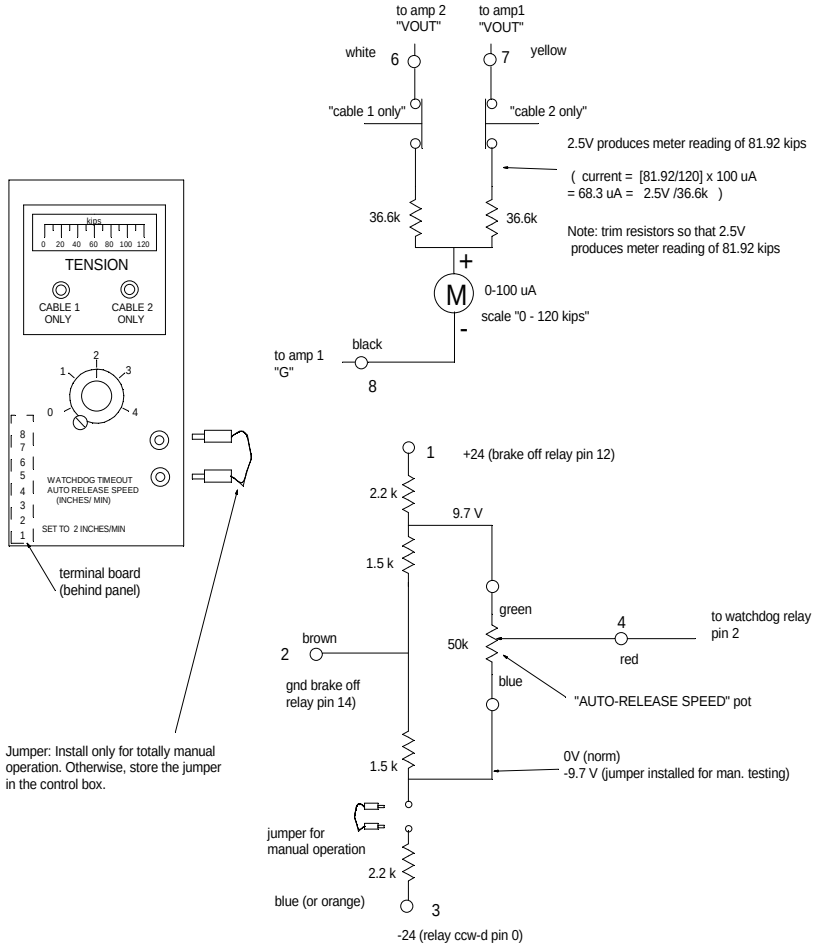

totally manual operation (independent of Little Star)
1. install jumper
2. pull out watch dog timer relay
3. manually actuate control room emg stop relay
4. manually actuate brake off relay
5. monemtarily actuate safety relay to reset if necessary

AUTO-RELEASE SPEED pot becomes speed control
midscale (2) is zero, full cw is full speed down (increase tension)
full ccw is full speed up (decrease tension)

file: td5.ecw jbh 1-29-01