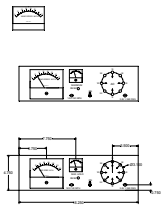

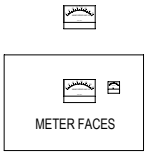

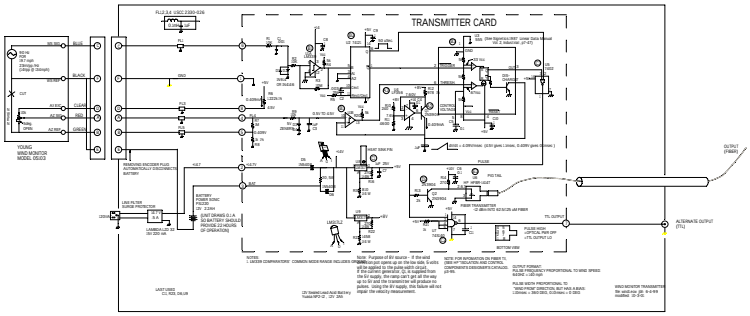

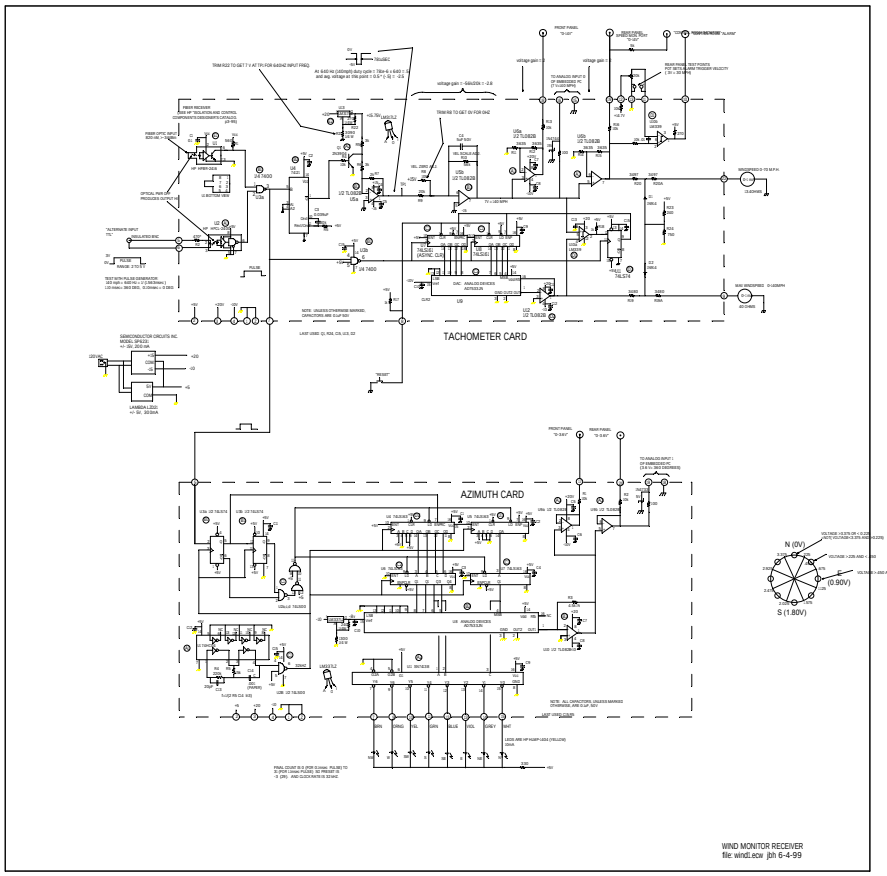

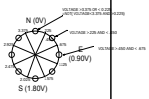

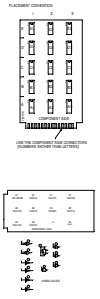

OVERSPEED LIMITER
PAGE 1 OF 3
BOARD 2
file: speed.scw jph 1-05-99