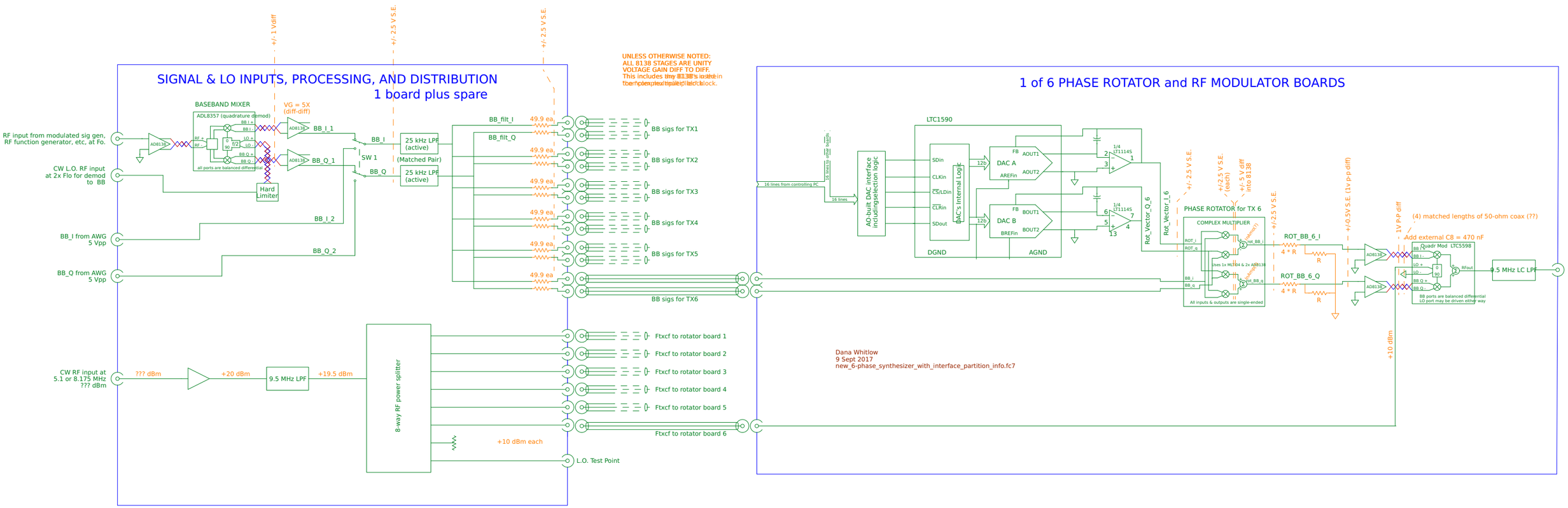

QUASI-SCHEMATIC SHOWS INTERFACE LEVELS AND PARTITIONING WITHIN NEW 6-PHASE SYNTHESIZER