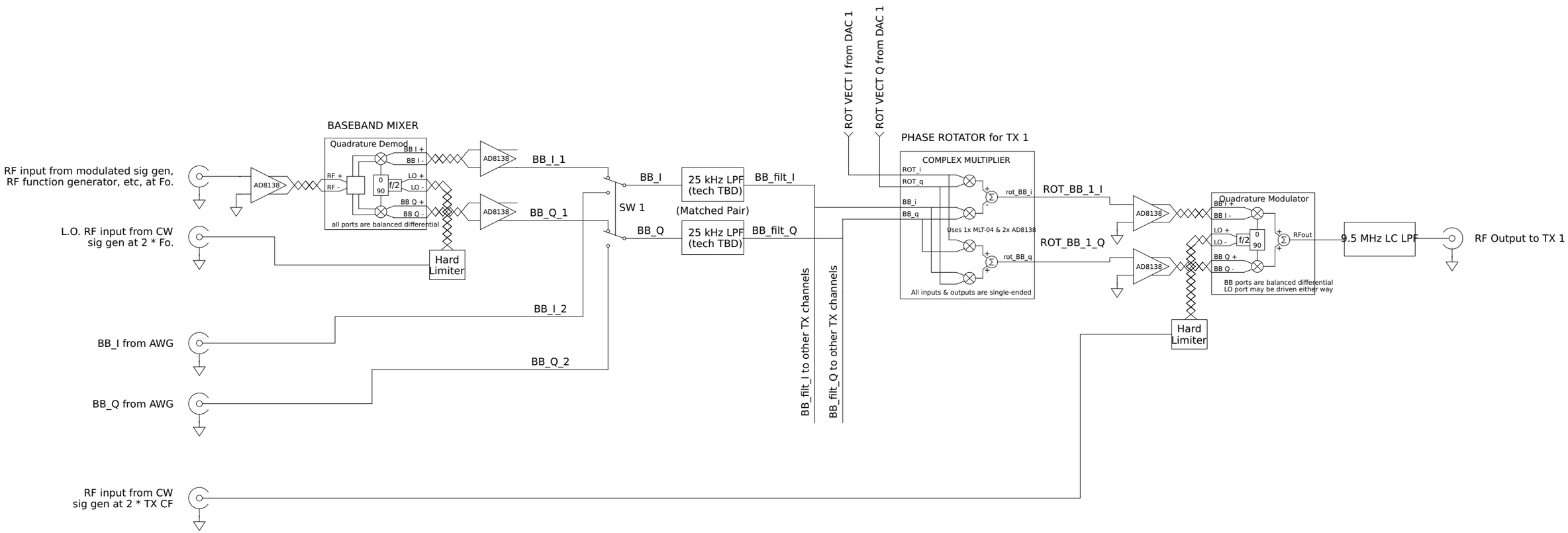
BASEBAND MIXER
Quadrature Demod
RF +
RF -
0
90
f/2
BB I +
BB I -
LO +
LO -
BB Q +
BB Q -
all ports are balanced differential
AD8138
AD8138
AD8138
Hard Limiter
RF input from modulated sig gen, RF function generator, etc, at Fo.
L.O. RF input from CW sig gen at 2 * Fo.
BB_I_1
BB_Q_1
BB_I_2
BB_Q_2
BB_I from AWG
BB_Q from AWG
RF input from CW sig gen at 2 * TX CF
SW 1
BB_I
BB_Q
25 kHz LPF (tech TBD)
25 kHz LPF (tech TBD)
(Matched Pair)
BB_filt_I
BB_filt_Q
BB_filt_I to other TX channels
BB_filt_Q to other TX channels
ROT VECT I from DAC 1
ROT VECT Q from DAC 1
PHASE ROTATOR for TX 1
COMPLEX MULTIPLIER
ROT_i
ROT_q
BB_i
BB_q
rot_BB_i
rot_BB_q
Uses 1x MLT-04 & 2x AD8138
All inputs & outputs are single-ended
ROT_BB_1_I
ROT_BB_1_Q
AD8138
AD8138
Hard Limiter
Quadrature Modulator
BB I +
BB I -
LO +
LO -
BB Q +
BB Q -
0
90
f/2
RFout
BB ports are balanced differential
LO port may be driven either way
9.5 MHz LC LPF
RF Output to TX 1