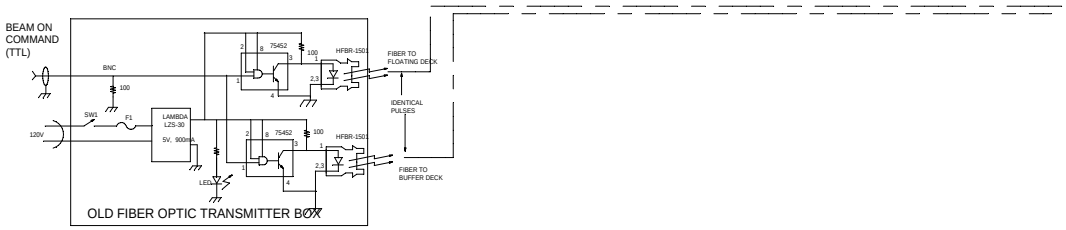
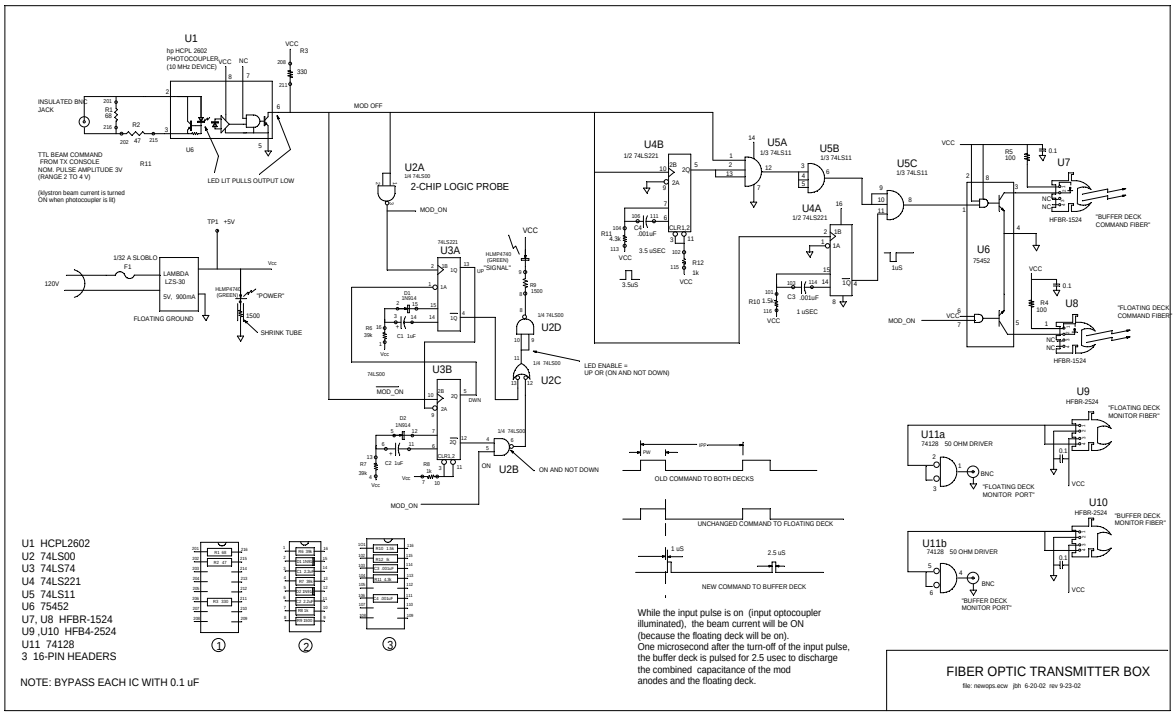
ALTERNATE U7,U8