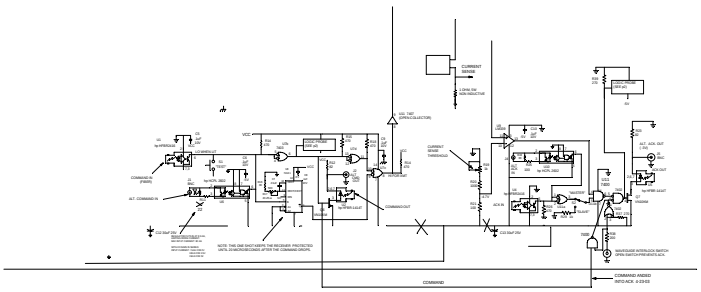
COMMAND
COMMAND ENDED
INTO ACK. 4-20KS

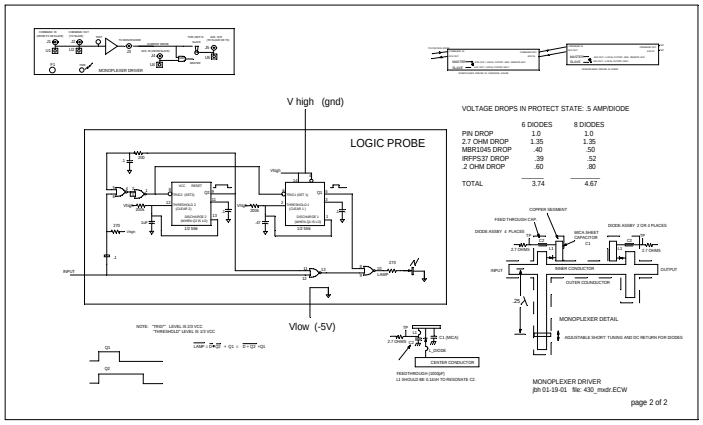
MONOPLEXER DRIVER
V high (gnd)
LOGIC PROBE
VOLTAGE DROPS IN PROTECT STATE. .5 AMP/DIODE
6 DIODES
8 DIODES
PIN DROP 1.0 1.0
2.7 OHM DROP 1.35 1.35
MBR1045 DROP .40 .50
IRFPS37 DROP .39 .52
.2 OHM DROP .60 .80
TOTAL 3.74 4.67
COPPER SEGMENT
FEED THROUGH CAP
DIODE ASSEY 4 PLACES
MICA SHEET CAPACITOR
DIODE ASSEY 2 OR 4 PLACES
INNER CONDUCTOR
OUTER CONDUCTOR
INPUT
OUTPUT
MONOPLEXER DETAIL
ADJUSTABLE SHORT TUNING AND DC RETURN FOR DIODES
Vlow (-5V)
CENTER CONDUCTOR
MONOPLEXER DRIVER
jjh 01-19-01 file: 430_mndr.ECW
page 2 of 2

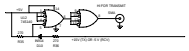

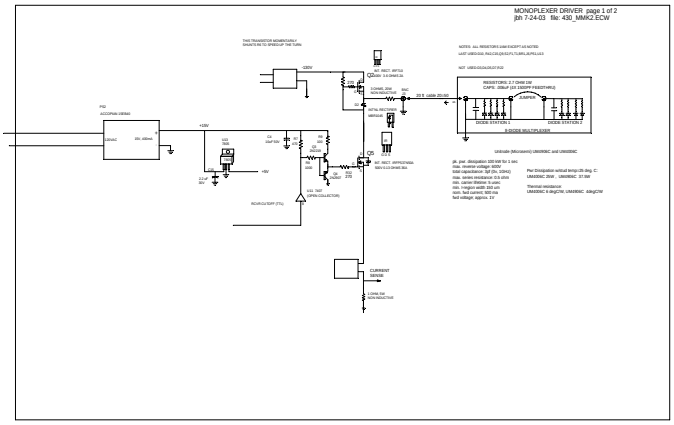
MONOPLEXER DRIVER page 1 of 2
jjh 7-24-03 file: 430_MMK2.ECW

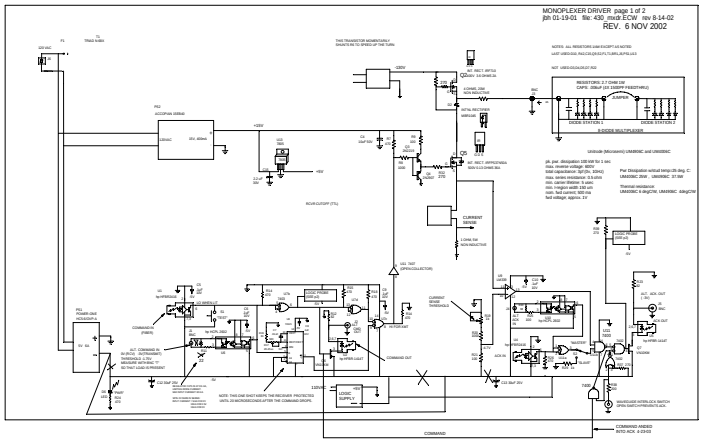
MONOPLEXER DRIVER page 1 of 2
jjh 01-19-01 file: 430_mndr.ECW rev 9-14-02
REV. 6 NOV 2002
COMMAND