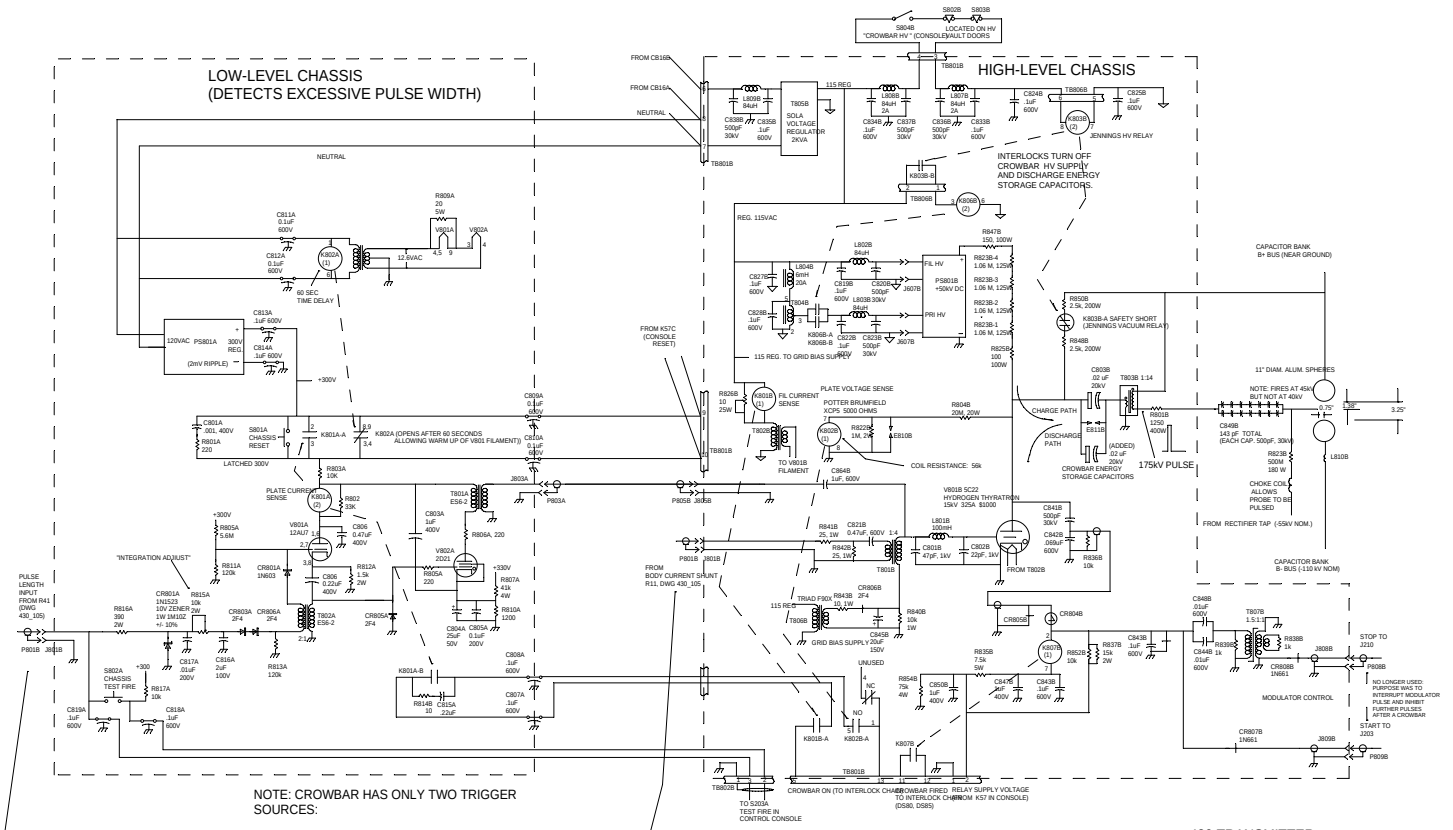

NOTE: CROWBAR HAS ONLY TWO TRIGGER SOURCES:

1. EXCESSIVE PULSE LENGTH (INTERNAL KLYSTRON ARC)
2. SUDDEN BODY CURRENT (INTERNAL KLYSTRON ARC)

file :430_102.ecw jbh 12-31-98

430 TRANSMITTER
DWG. 430_102.ecw
TITLE: CROWBAR (BOTH CHASSIS)
DRAWN 12-99 TO REPLACE D349C102 & C349C108
REV 7-23-02